EKVÜ seminar 11 mar 2016
Armacell / Armaflex

Tallinn / Estonia

Petri Ojanen

Condensation
Corrosion under insulation

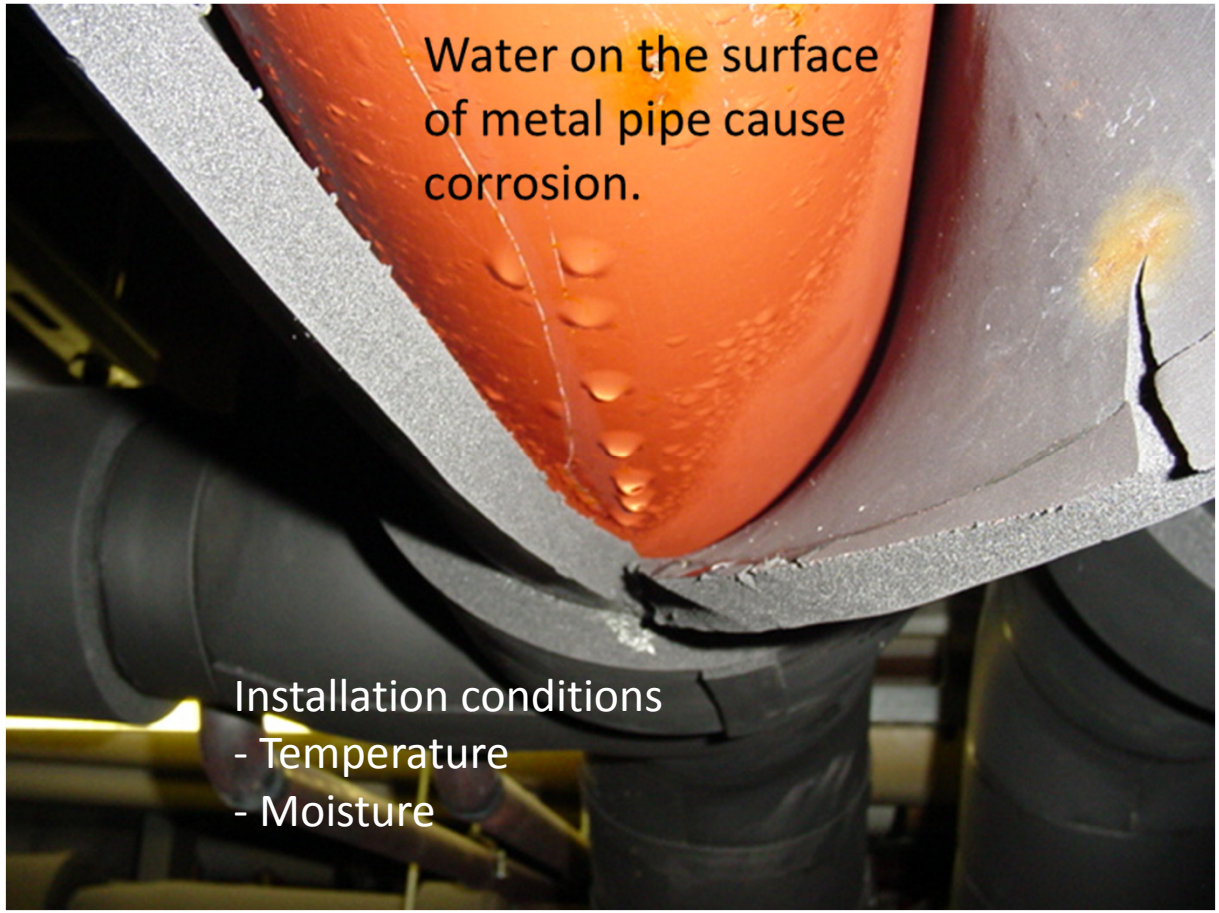

Condensation on top of Insulation



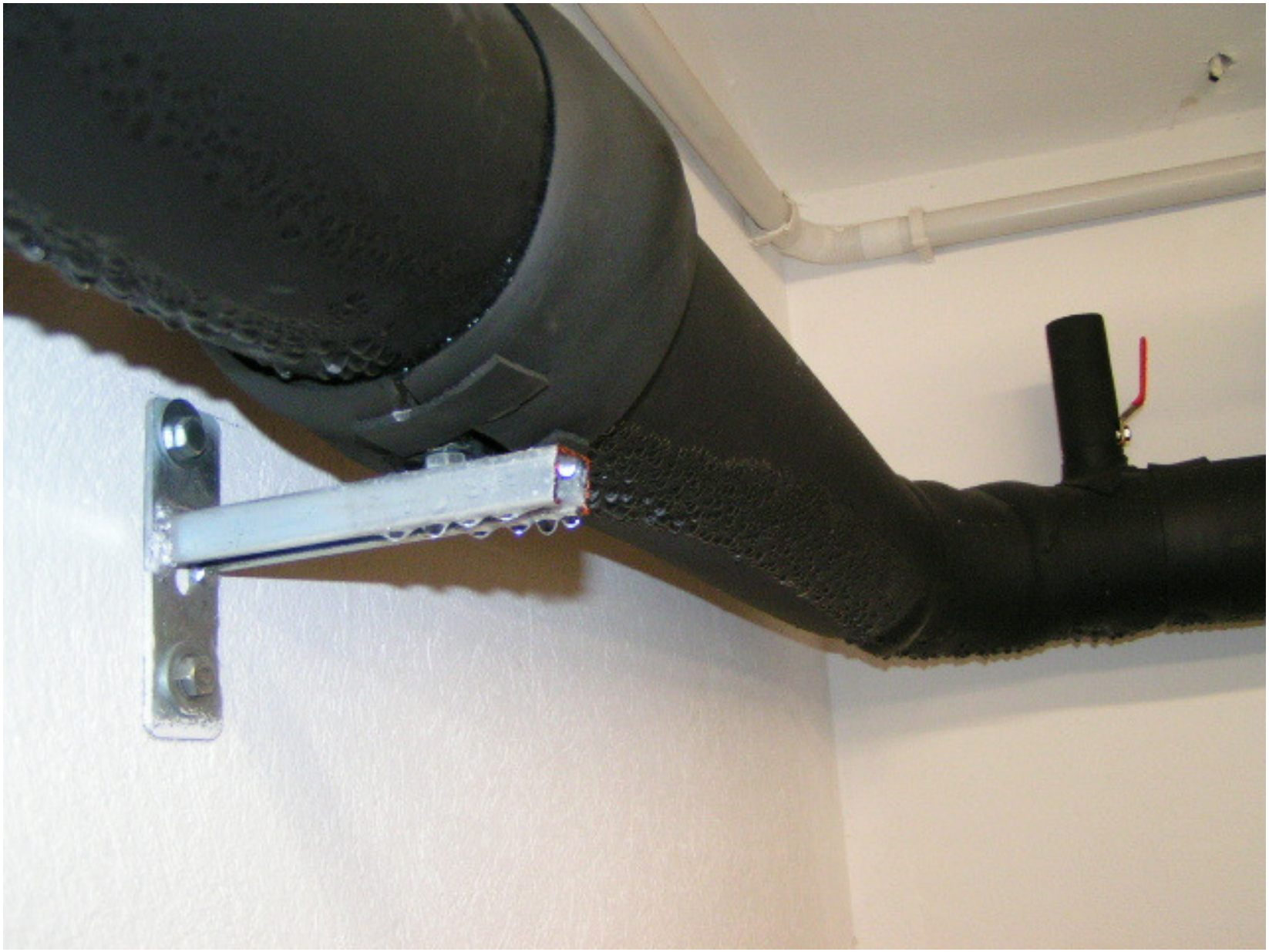

bearing PUR/PIR inserts and an aluminium outer shell cladding.

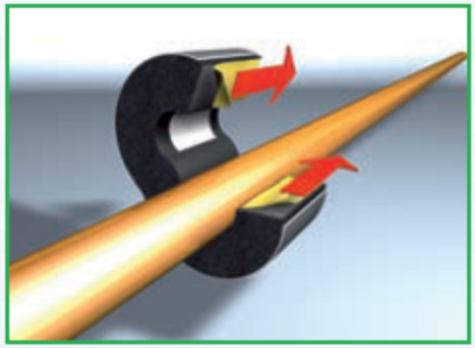

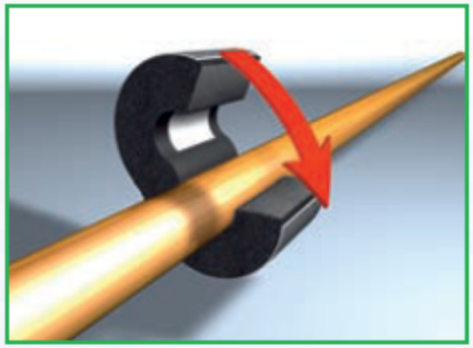

Install Armafix pipe support to the pipe, remove the yellow protective paper strip on both side. Close the seam applying firm pressure.

Note: Select the correctly dimensioned Armafix pipe support (min. insulation thickness of tube).

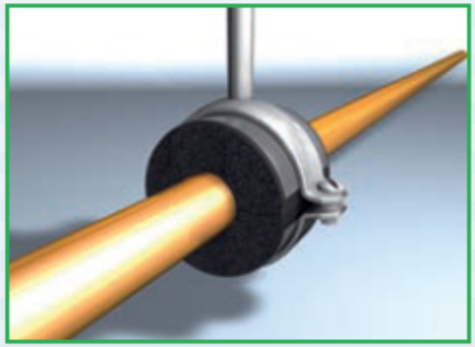

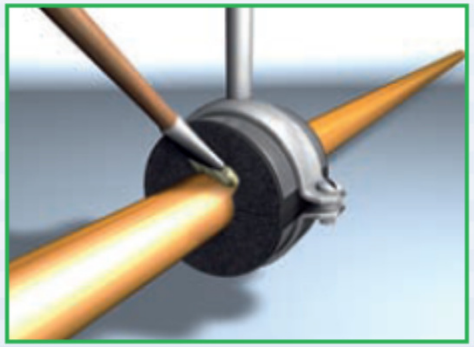

Install the brackets.

Important: Use only the PUR/PIR segments as load bearing.



Wall Thickness

Two pipes

different ∅

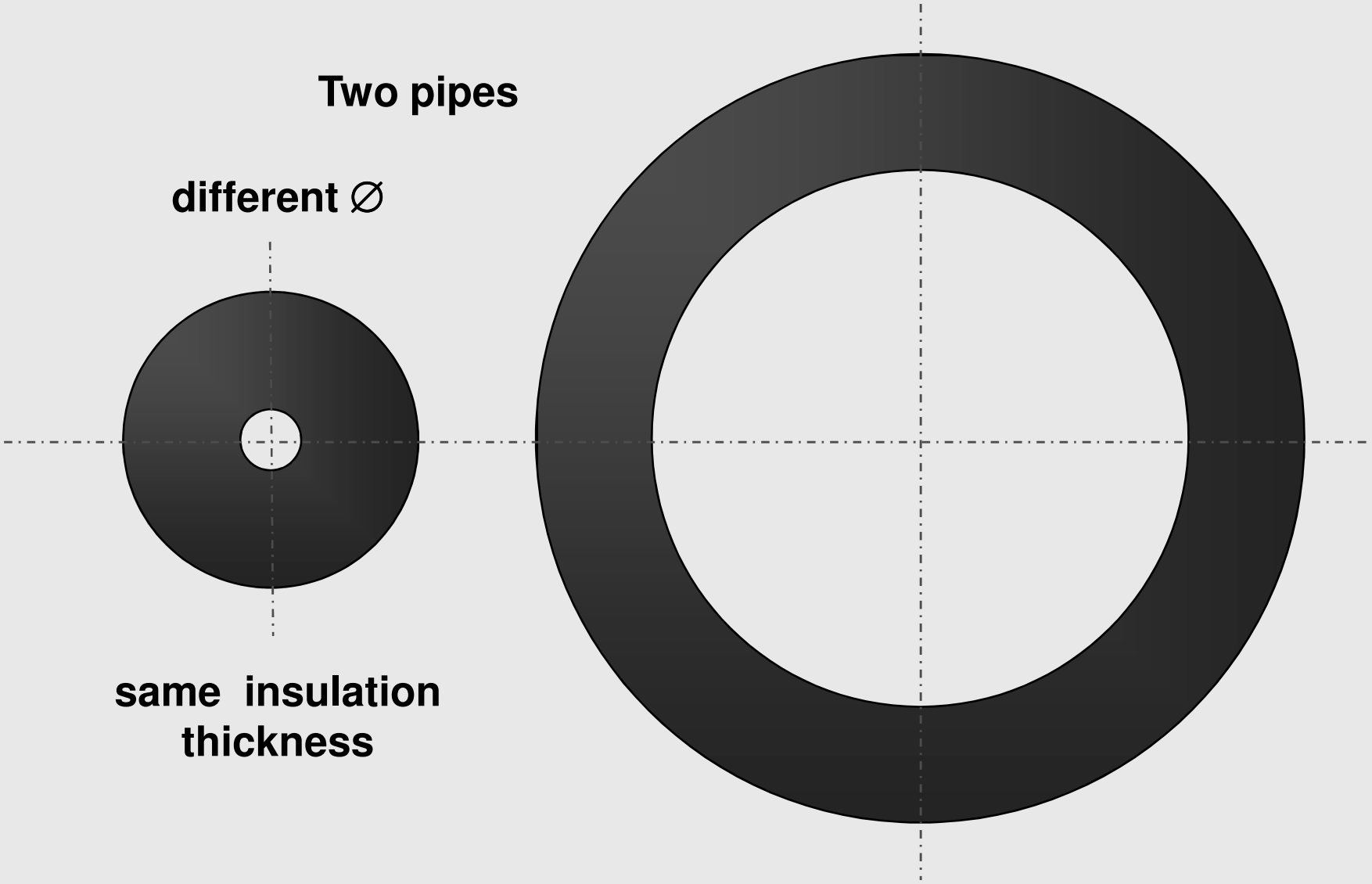

same insulation thickness

Engineered Wall Thickness

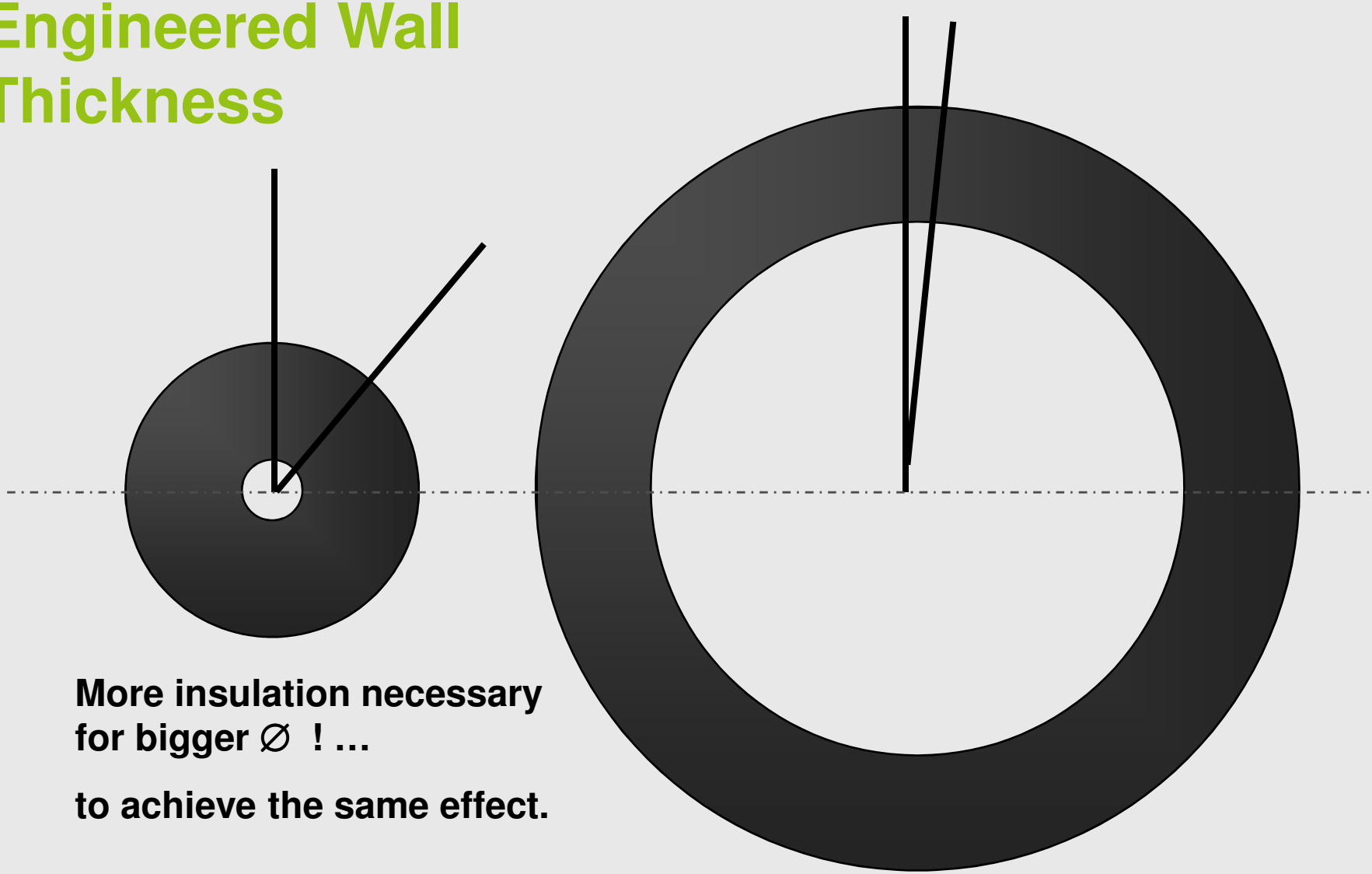

More insulation necessary for bigger ∅ ! …

to achieve the same effect.

Insulation Tube without Engineered Wall Thickness

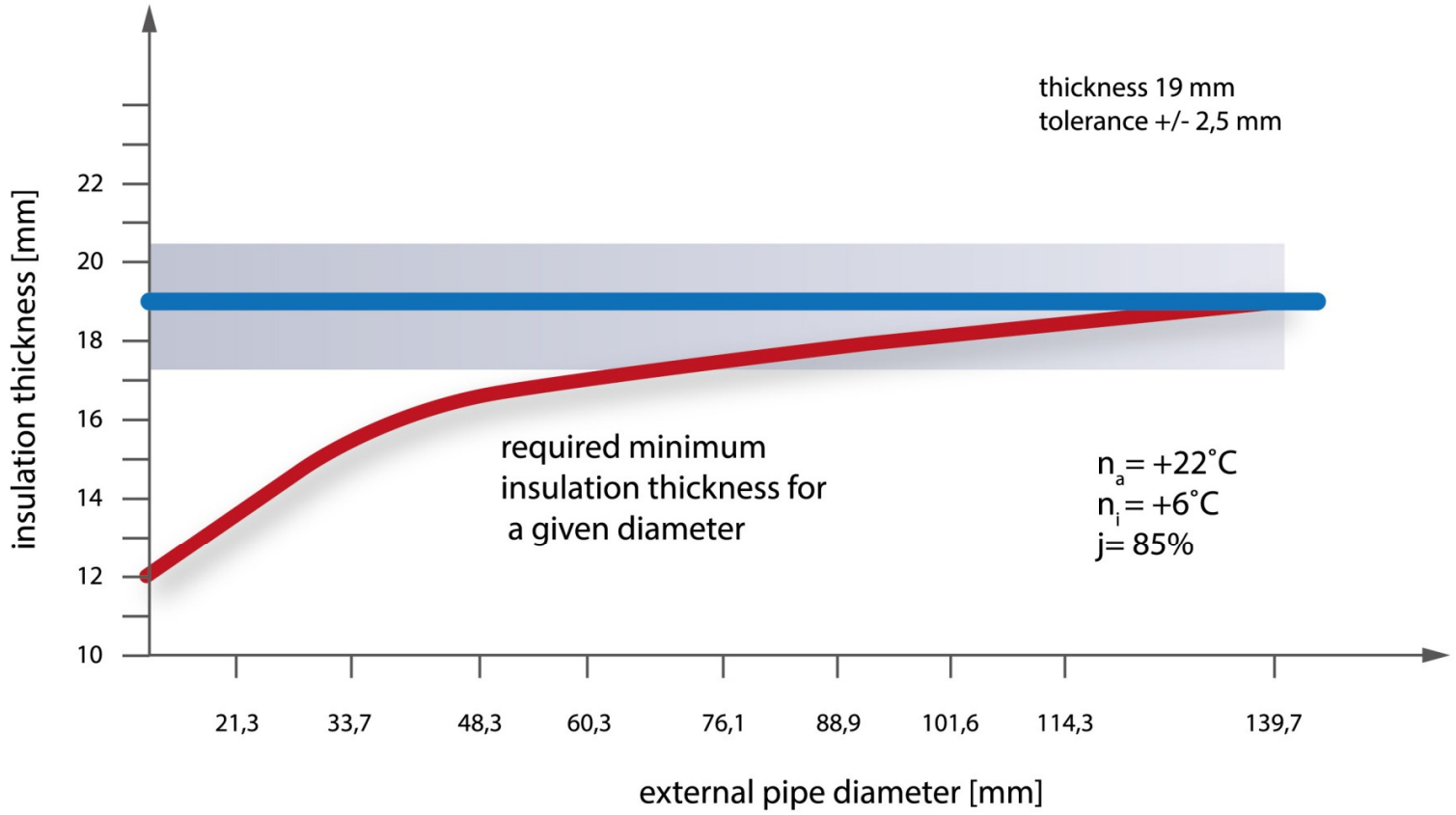

Insulation Tube with Engineered Wall Thickness

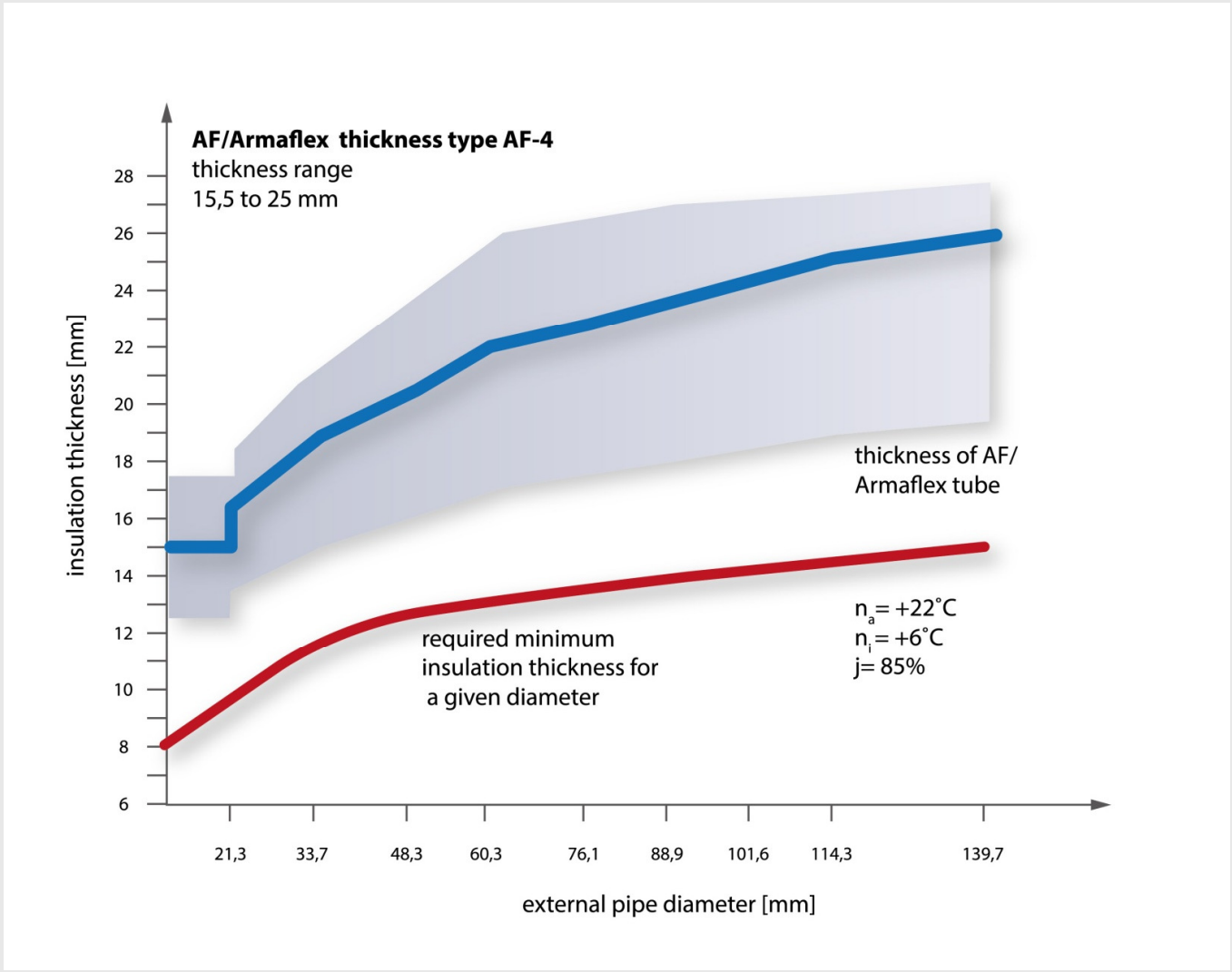

Engineered Wall Thickness of AF/Armaflex Tubes

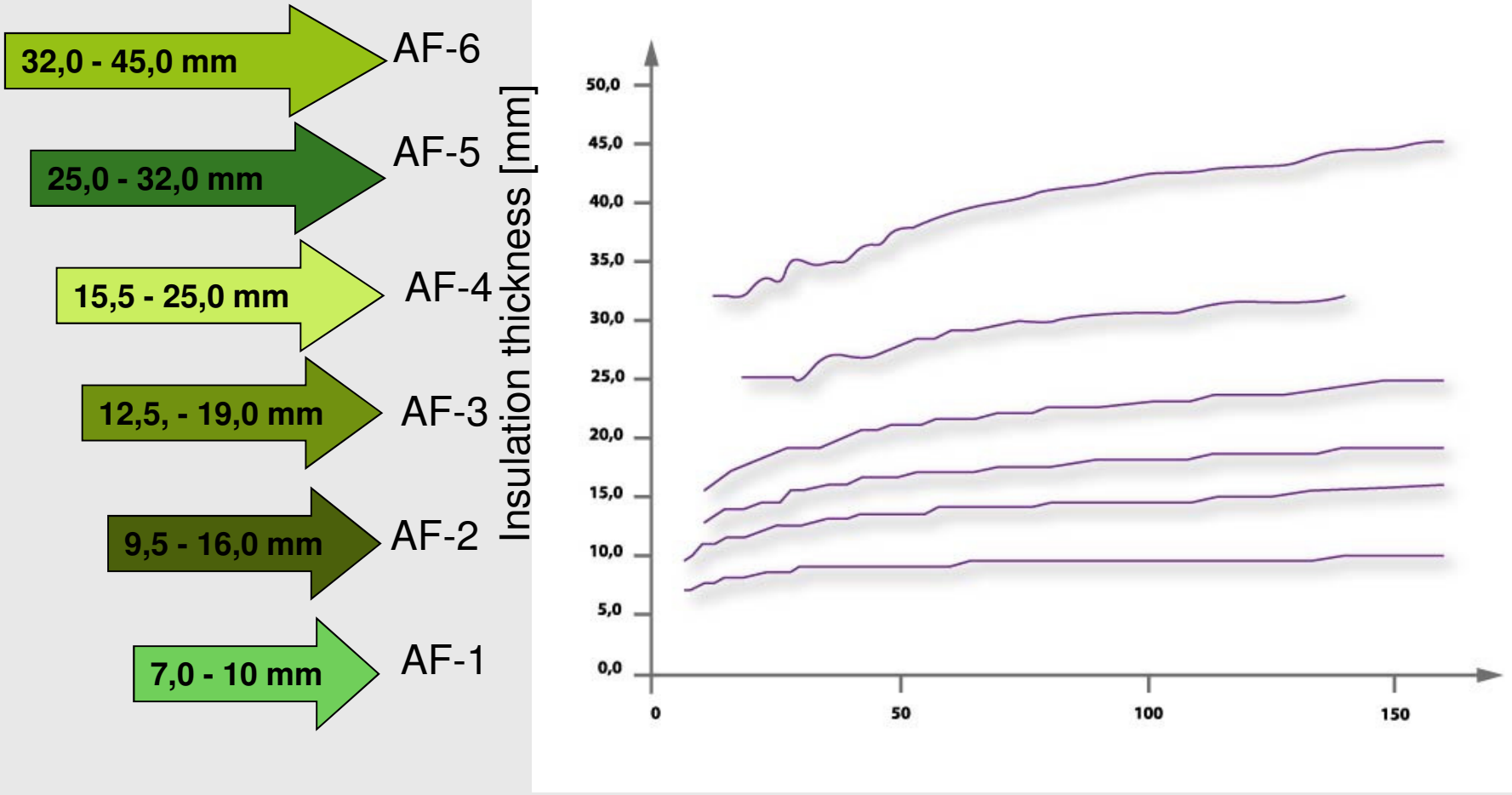

Minimum Insulation Thickness to prevent Condensation on the Surface

The minimum insulation thickness that prevent condensation on the external insulation surface can be calculated with ArmWin program

The minimum thickness depends on following parameters:

T_L	Temperature of the medium
T_A	Ambient temperature
Φ	Relative humidity of an ambient air
ID	Inner dimanssion of the pipe
H_{se}	External surface coefficient
λ	Thermal coductivity of the insulation material

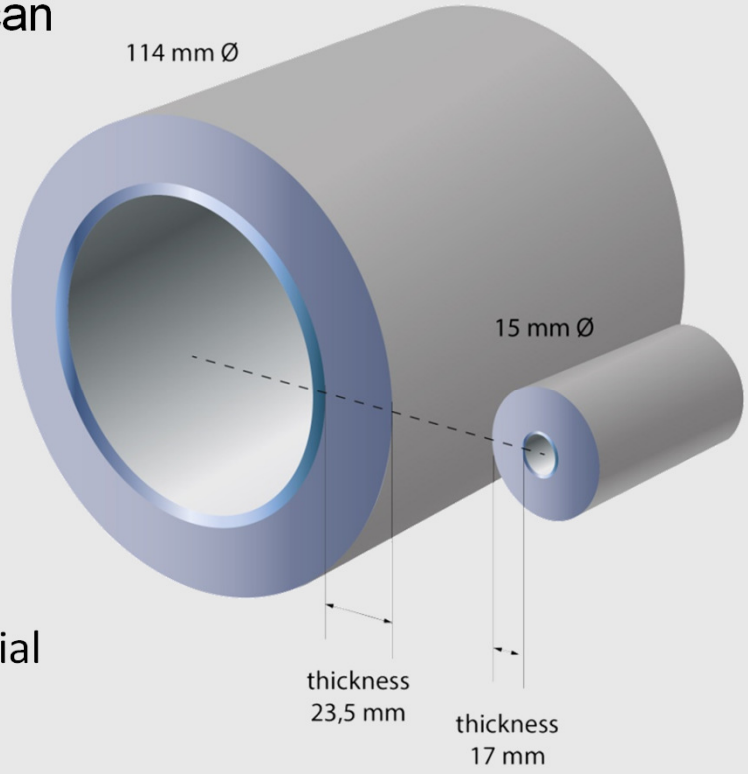

© Armacell Enterprise GmbH

Insulation surface temperature can not exceed the dew point temperature

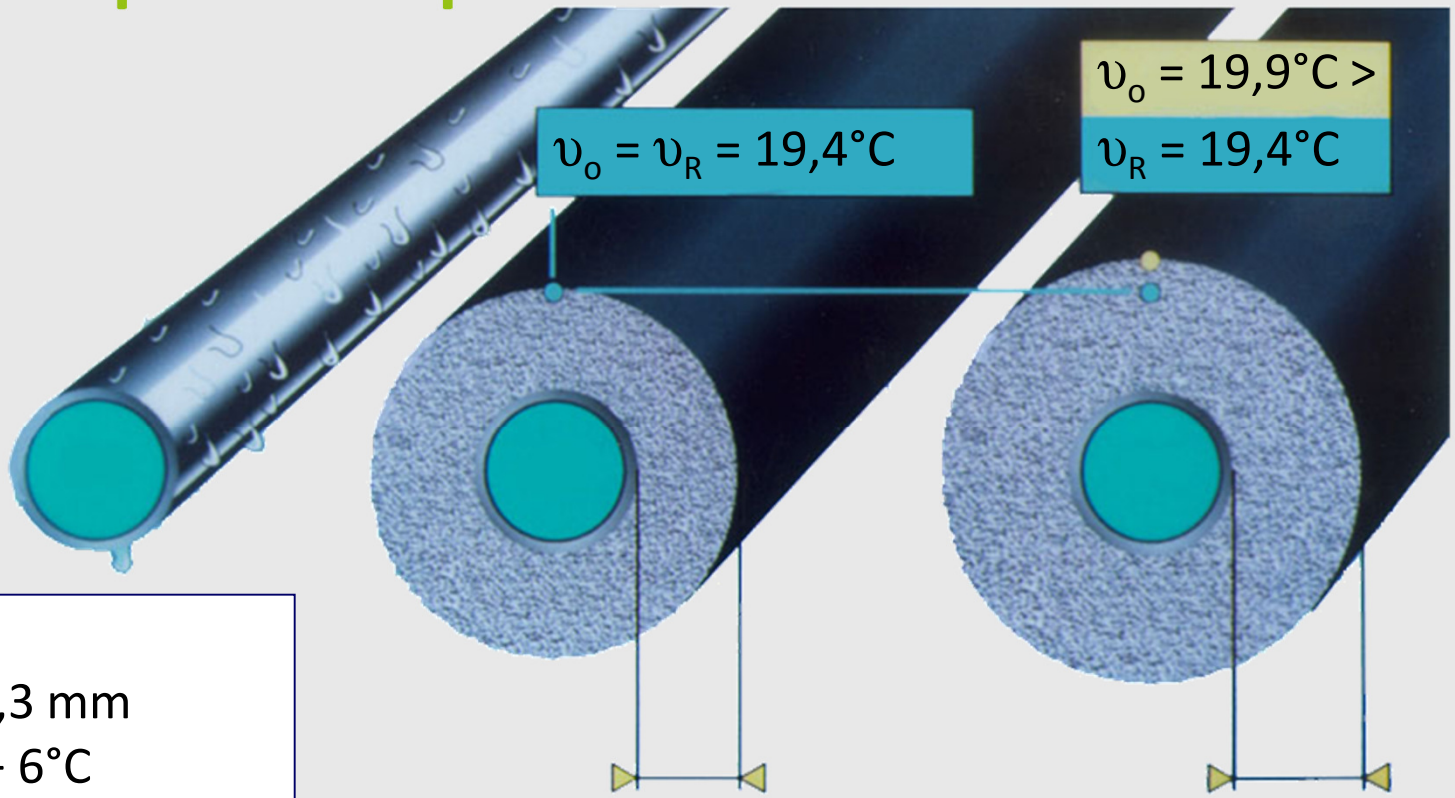

steel pipe DN 15
ext. diameter 21,3 mm
line temp. $\upsilon_m = + 6°C$
ambient temp. $\upsilon_a = + 22°C$
humidity $\varphi = 85\ \%$

$S_R = 14{,}2$ mm

$S_{min} = 16{,}5$ mm
$S_{nom} = 18{,}0$ mm

thickness range
tube AF-4-022

© Armacell Enterprise GmbH

Surface coefficient

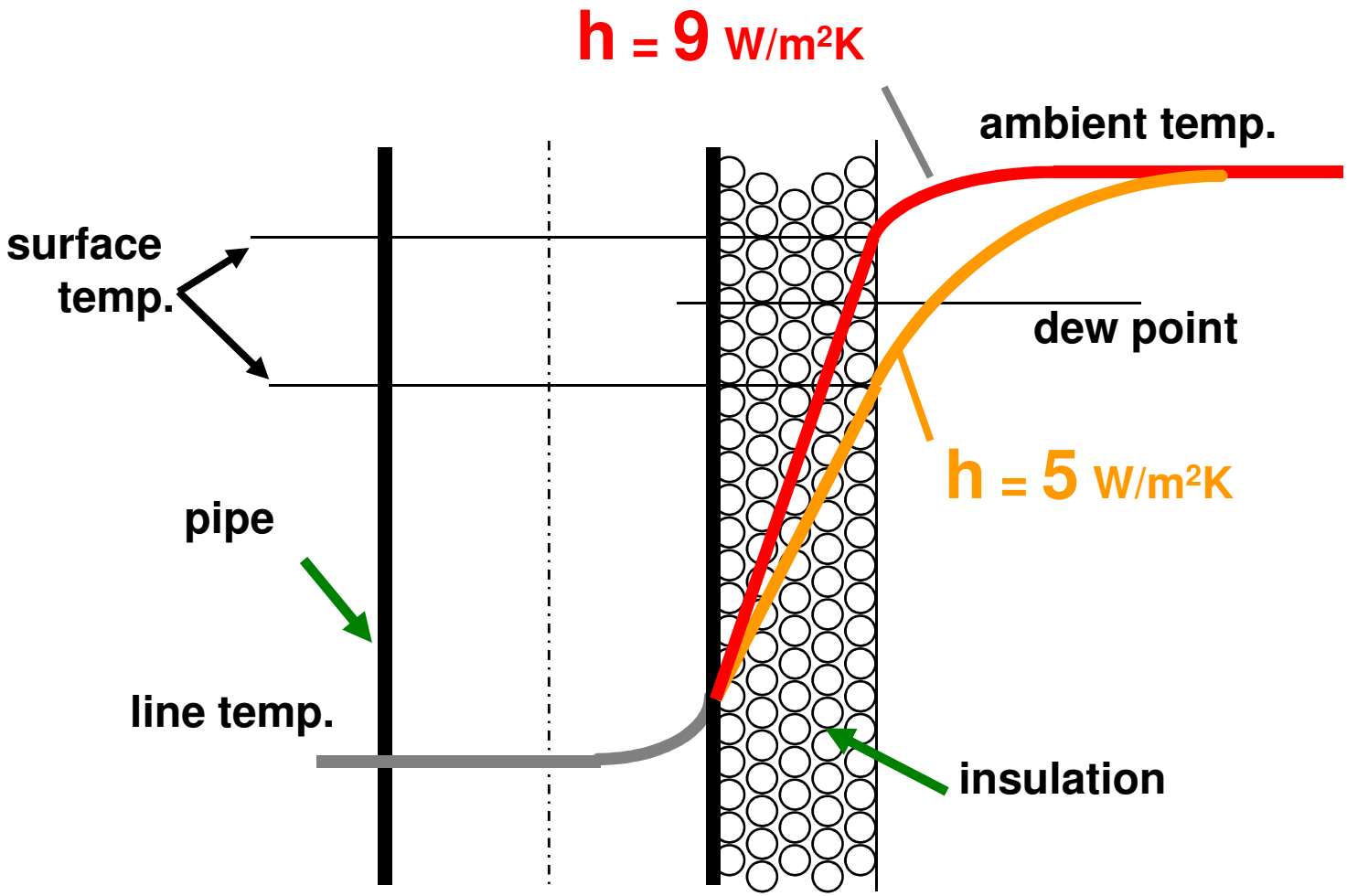

© Armacell Enterprise GmbH

Surface Coefficient of heat transfer



High surface coefficient (9 W/m²·K)
Emissivity (ε) = 0.9



Low surface coefficient (5 W/m²·K)
Emissivity (ε) = 0.05

© Armacell Enterprise GmbH

Surface Coefficient of Heat Transfer

- The table below shows the effect the surface coefficient of heat transfer has on the thickness required to prevent condensation.
- In this case a high surface coefficient (black Armaflex at 9 W/m²·K) requires almost half the insulation thickness of a low surface coefficient (metallic cladding at 5 W/m²·K).

6°C medium temperature
24°C ambient temperature
Based on a flat surface

Relative Humidity	Surface coefficient of heat transfer (W/m²·K)		
	9	7	5
55%	Min. 3.6mm	Min. 4.7mm	Min. 6.5mm
65%	Min. 6.6mm	Min. 8.4mm	Min. 11.8mm
75%	Min. 11.7mm	Min. 15.1mm	Min. 21.1mm



© Armacell Enterprise GmbH

Static area increases the danger of condensation

lack of free air circulation (convection)

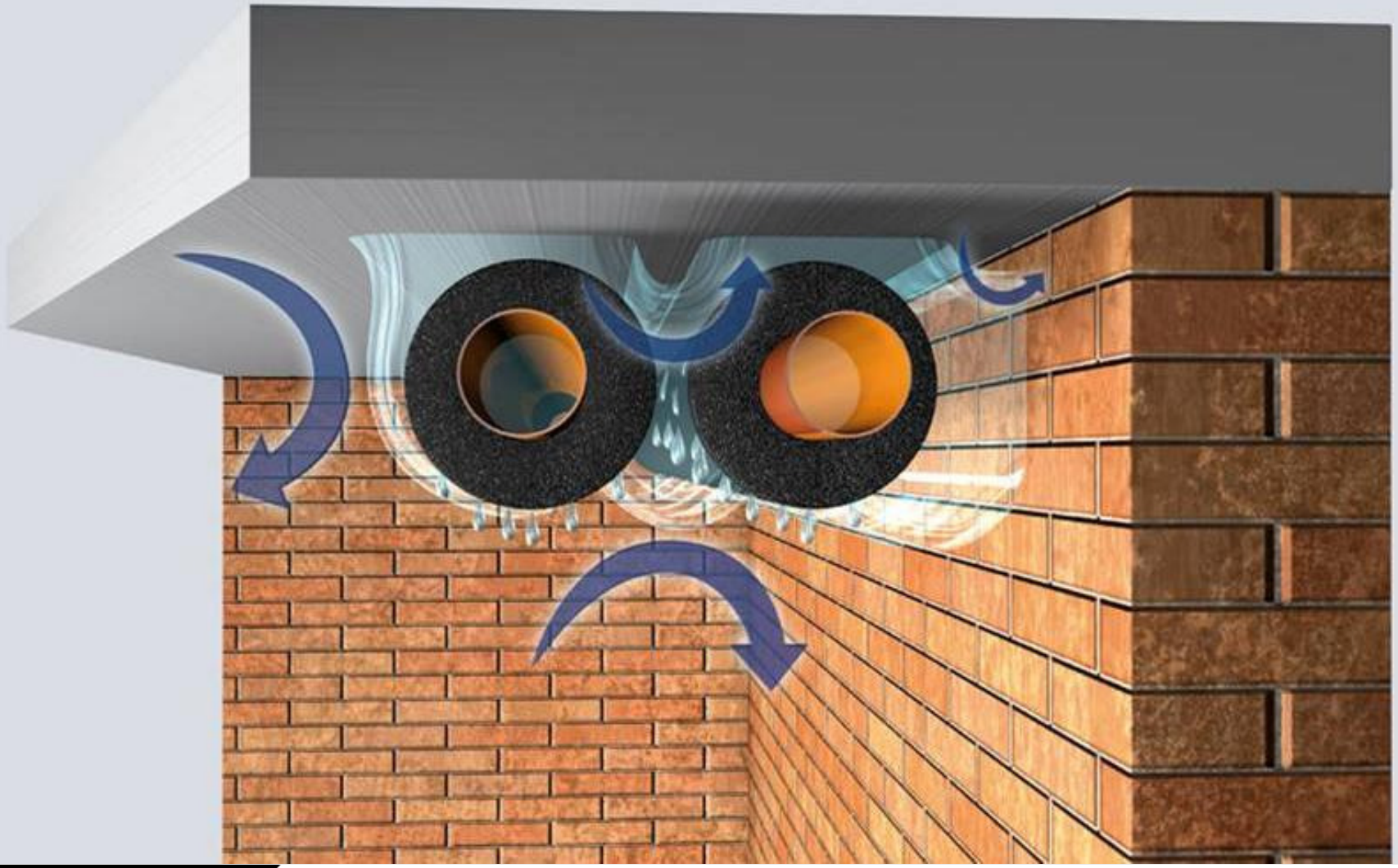

© Armacell Enterprise GmbH

Water Vapour Diffusion Resistance Factor μ

Thanks to strong μ value water vapour penetration is very slow and kept at limited level.

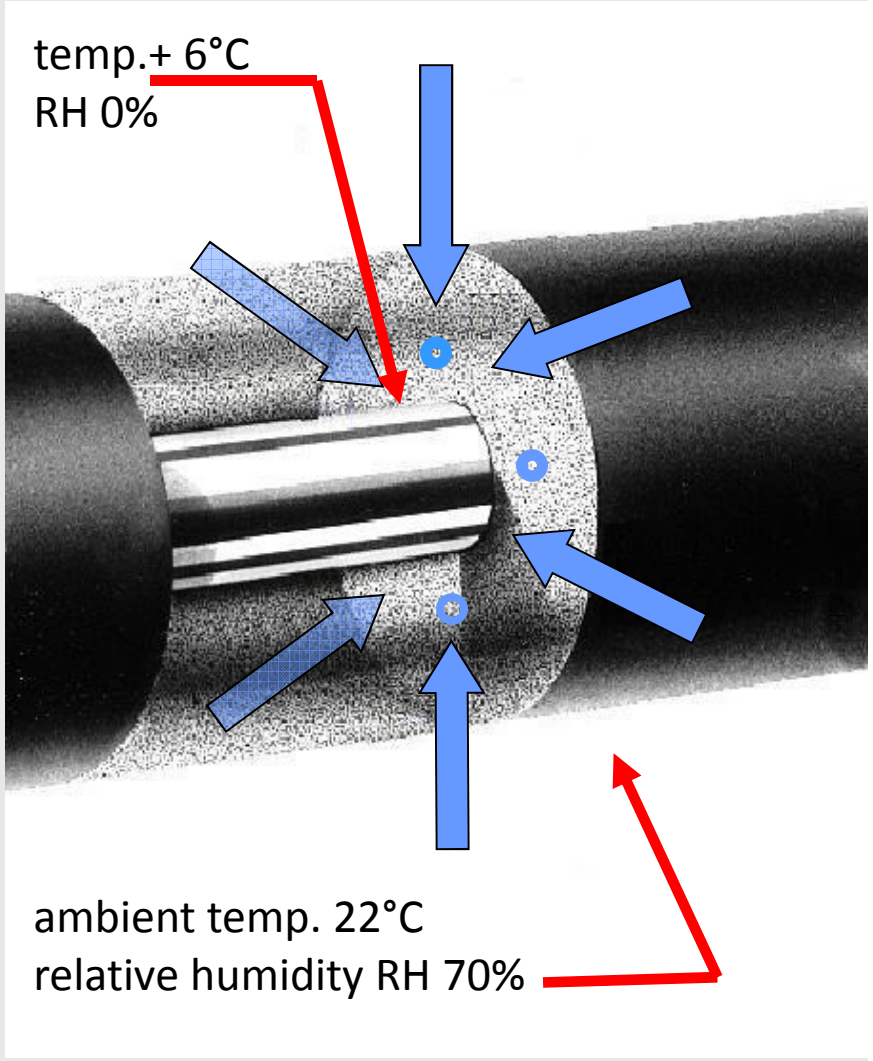

© Armacell Enterprise GmbH

A reliable closed-cell material must protect the insulation against impermissible penetration of moisture.

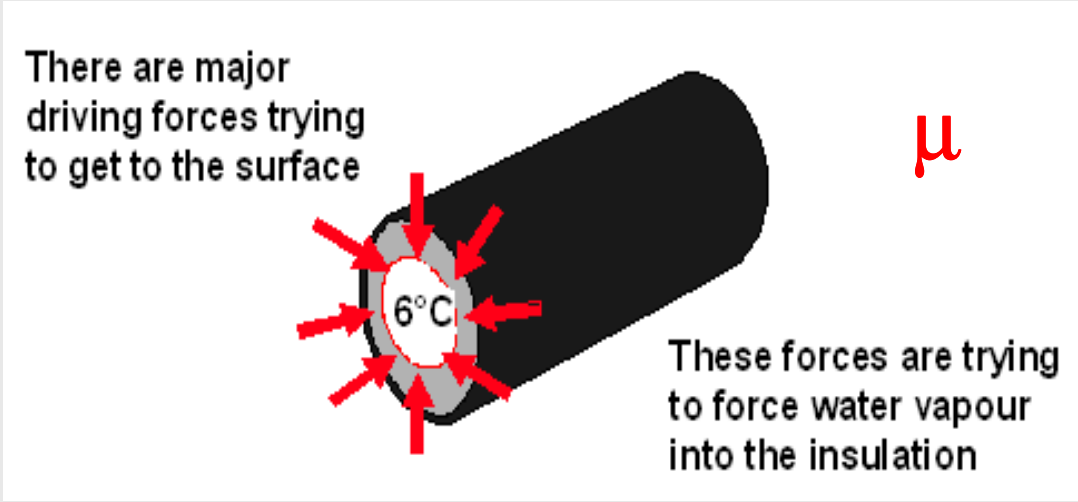

μ

Technical insulation with high μ-value reduces the possibility of moisture penetration into insulation and decrease the change in λ value

© Armacell Enterprise GmbH

Tight joints

The integrity of the system (tight joints) is only ensured by correct installation procedures and the use of correct adhesive.

The contact System Armaflex Adhesive grabs the Armaflex insulation surface by chemical reaction resulting in a "**cold weld**" joint.

"**cold weld**" joint guarantees required tightness



© Armacell Enterprise GmbH

Heat loss vs. insulation thickness

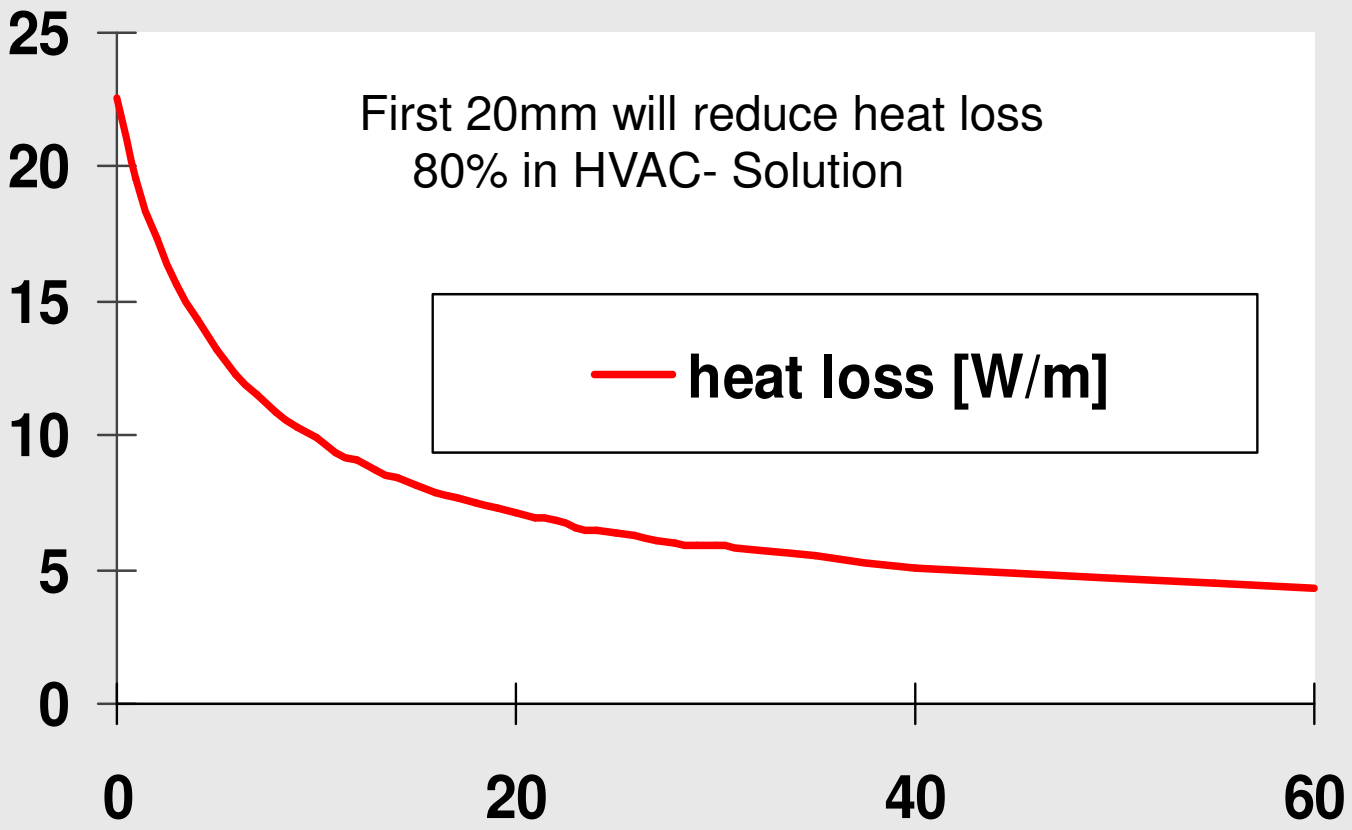

service temp. = +46 °C
ambient temp. = +13 °C
pipe ∅ = 22 mm
$\lambda_{10\,°C} \leq 0{,}038$ W/mK

armacell

Economic Thickness of Insulation

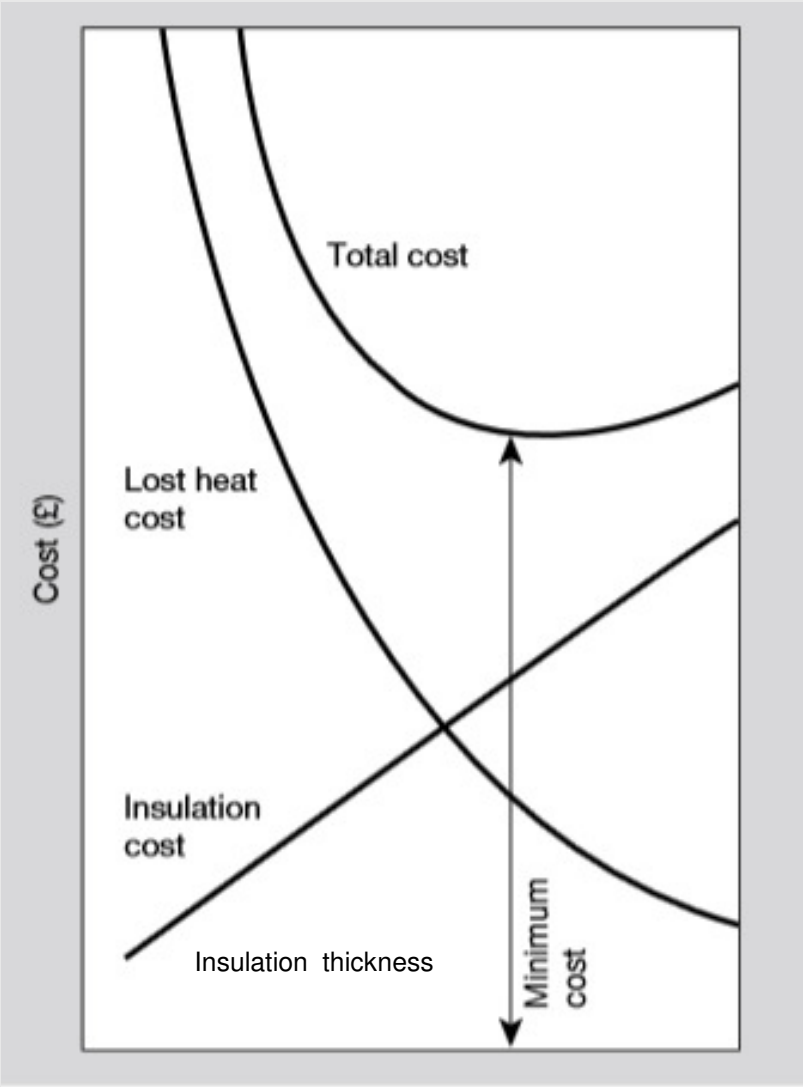

armacell

Closed cell insulation prevents corrosion



AF/Armaflex insulation after 20 years

values of μ i λ parameters preserved



© Armacell Enterprise GmbH

	floors	D_{fl}-s1	D_{fl}-s1	—
Assembly and business premises				
– fire load under 600 MJ/m² and				
– area is ≤ 300 m²	walls and ceilings	D-s2, d2	B-s1, d0	D-s2, d2
	floors	—	—	—
– area is over 300 m²	walls and ceilings	C-s2, d1	B-s1, d0	D-s2, d2
	floors	—	—	—
– fire load ≥ 600 MJ/m²	walls and ceilings	B-s1, d0	B-s1, d0	B-s1, d0
	floors	D_{fl}-s1	D_{fl}-s1	—
Office premises	walls and ceilings	D-s2, d2 [1]	B-s1, d0 [2]	D-s2, d2 [1]
	floors	—	—	—
Production and storage premises				
– fire hazard class 1	walls and ceilings	D-s2, d2	B-s1, d0	D-s2, d2
	floors	D_{fl}-s1	D_{fl}-s1	—
– fire hazard class 2	walls and ceilings	B-s1, d0	B-s1, d0	B-s1, d0
	floors	$A2_{fl}$-s1	$A2_{fl}$-s1	$A2_{fl}$-s1
Motorcar repair shops and service stations, garages (in garages possibility of derogation according to part E4 of the National Building Code of Finland)	walls and ceilings	B-s1, d0	B-s1, d0	B-s1, d0
	floors	$A2_{fl}$-s1	$A2_{fl}$-s1	$A2_{fl}$-s1
Attics and basements				
– usable attics	floors	$A2_{fl}$-s1	D_{fl}-s1	D_{fl}-s1
– unusable attics and low attic spaces and voids	top surface of uppermost floor	B-s1, d0	B-s1, d0	—
– basements in general	walls and ceilings	C-s2, d1	B-s1, d0	D-s2, d2
	floors	D_{fl}-s1	D_{fl}-s1	D_{fl}-s1
– rooms for technical service	walls and ceilings	B-s1, d0	B-s1, d0	B-s1, d0
	floors	D_{fl}-s1	D_{fl}-s1	D_{fl}-s1
	floors of boiler room	$A2_{fl}$-s1	$A2_{fl}$-s1	$A2_{fl}$-s1
Exits	walls and ceilings	A2-s1, d0 [2]	B-s1, d0	B-s1, d0
	floors	D_{fl}-s1	D_{fl}-s1	D_{fl}-s1
Internal corridors in accommodation and office premises	walls and ceilings	B-s1, d0	B-s1, d0	B-s1, d0
	floors	D_{fl}-s1	D_{fl}-s1	—
Saunas	walls and ceilings	D-s2, d2	D-s2, d2	D-s2, d2
	floors	—	—	—

Symbols in the table:

— = no requirement

* When a protective covering according to clause 8.2.3 is

Notes to the table:

[1] Minor parts of wall surfaces may be coated with building materials not meeting the requirements of any class.

[2] Minor parts of wall surfaces may be coated with building materials of

Armaflex Ultima

THE FIRST LOW SMOKE FLEXIBLE INSULATION FOR INCREASED PEOPLE SAFETY

- Increased safety through superior fire performance and reduced **smoke density**
- Manufactured with Armaprene, patented technology
- Reduces energy losses and minimizes CO_2 emissions
- First flexible closed-cell insulation with Euroclass **B_L,s1-d0**
- Reliable system solution with Armafix Ultima, tapes and adhesives

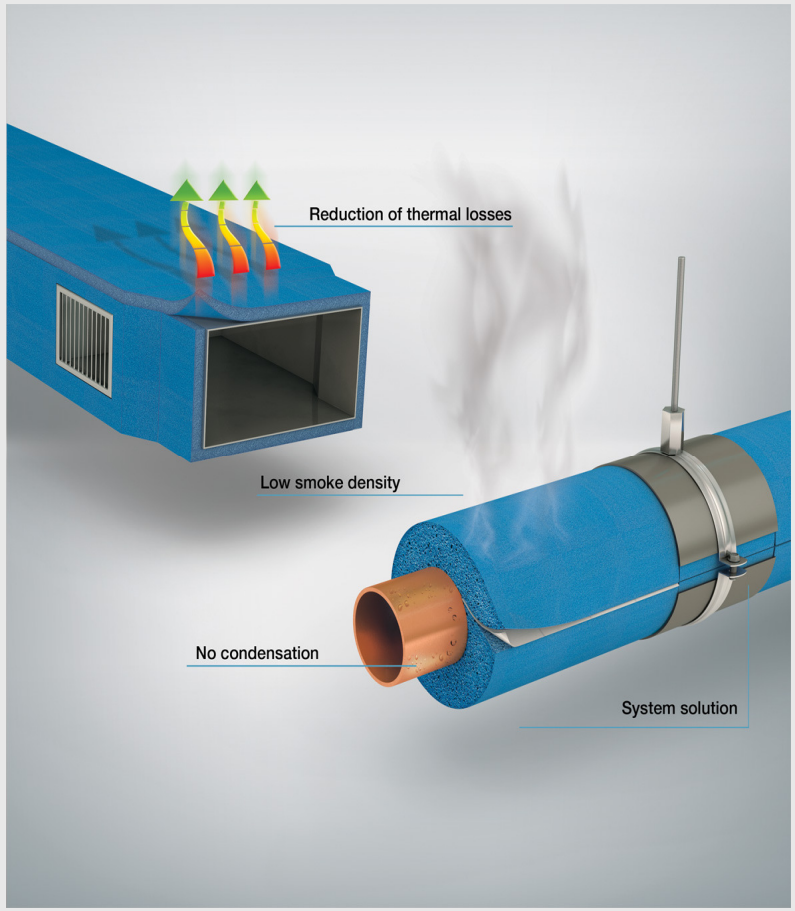

© Armacell Enterprise GmbH

Comparison of different smoke classes according the SBI Test

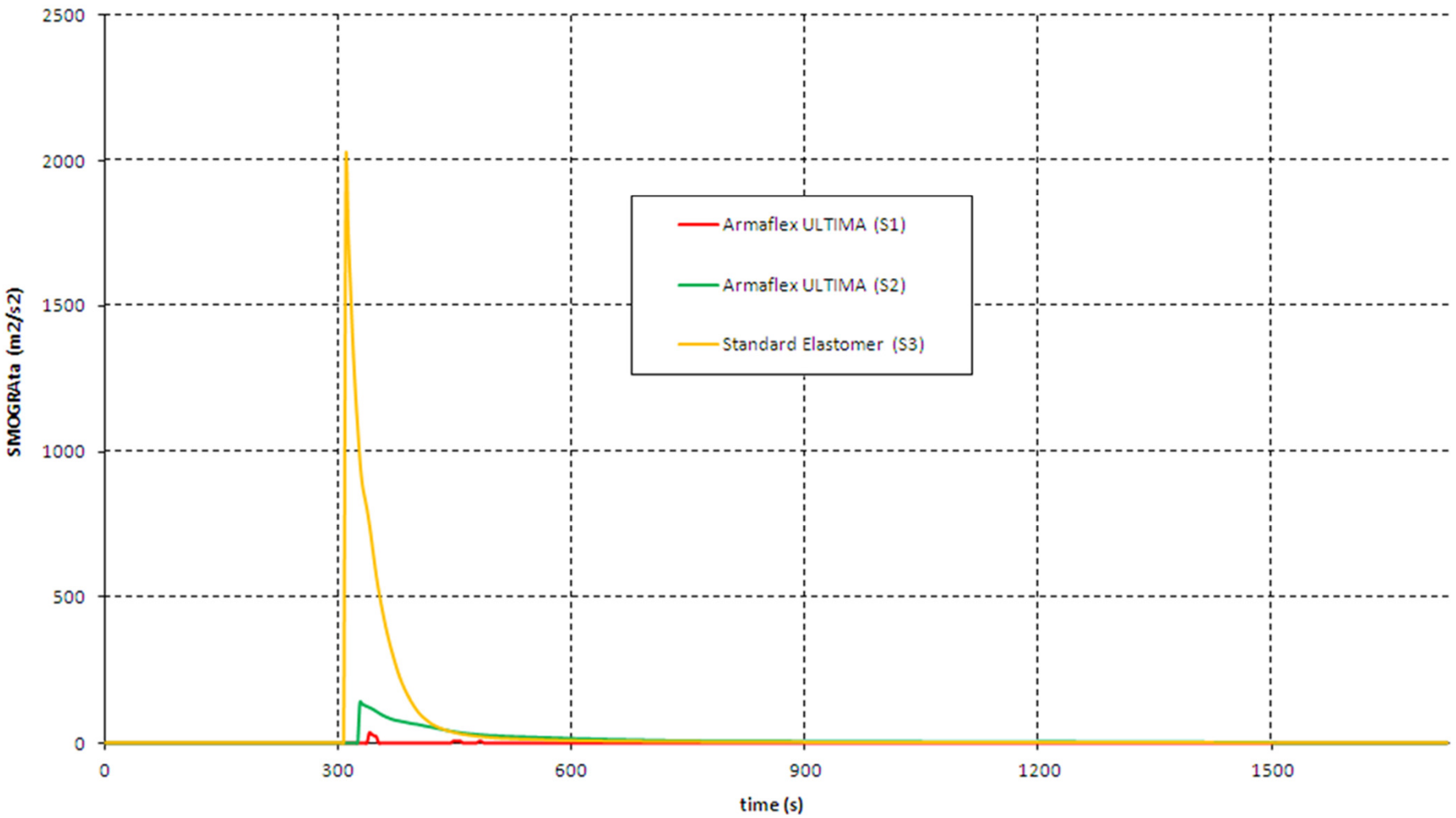

© Armacell Enterprise GmbH

Adhesives for Armaflex Ultima

Armaflex Ultima SF990 Adhesive

- ✓ top of the line, water-based, high-tech adhesive
- ✓ SF990 is completely solvent-free, no VOC
- ✓ future oriented, trully environment-friendly adhesive
- ✓ no smell or emissions
- ✓ ideal for closed, confined spaces or for Green Buildings
- ✓ for medium temperatures between -50°C up to +110°C

Armaflex Ultima RS850 Adhesive

- ✓ high performance solvent-reduced adhesive
- ✓ thixotropic, high viscoscity gel
- ✓ doesn‘t drip
- ✓ doesn‘t evaporate when left open (until stirred)
- ✓ for comfortable, more precise application with standard tools
- ✓ for medium temperatures between -50°C up to +70°C

Armaflex Ultima 700 Adhesive

- ✓ new generation, solvent-based high performance adhesive
- ✓ specially engineered for Armaflex Ultima
- ✓ for medium temperatures between -50°C up to +110°C





© Armacell Enterprise GmbH

Strong Environmental Positioning

- ✓ no brominated fire retardants
- ✓ no PVC
- ✓ no SCCP or MCCP (short-chain or medium-chain chlorinated parafins)
- ✓ self-adhesive products
- ✓ low VOC emission
- ✓ solvent-free SF 990 adhesive



© Armacell Enterprise GmbH

Arma-Chek Silver: Key Benefits

Technical performance in a shiny jacket

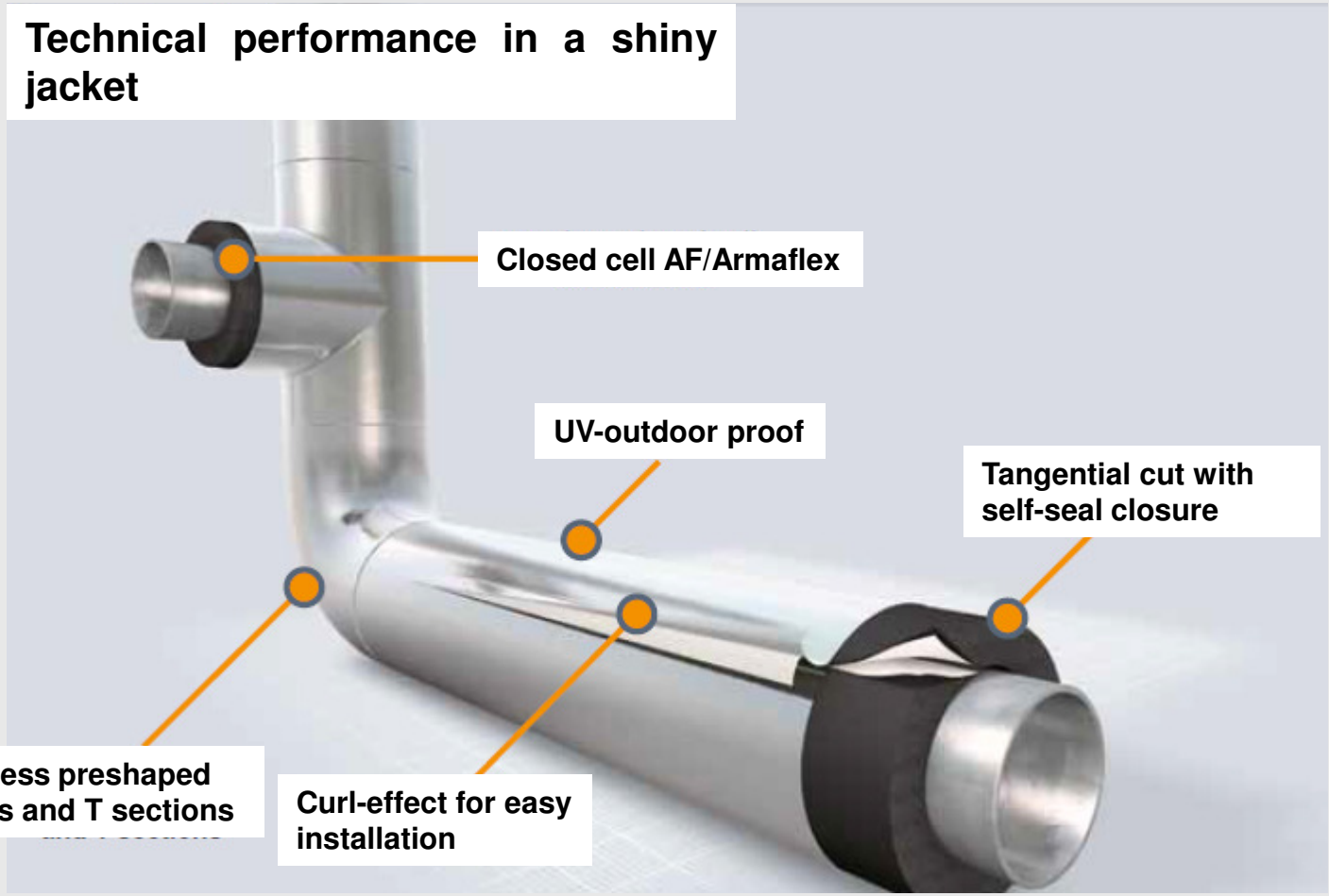

© Armacell Enterprise GmbH

Arma-Chek D Key Benefits

- Easy and fast to instal
- Maintenance-friendly – if damage to the surface occurs, we can replace part of the material and do not need to renew all of it


very flexible material

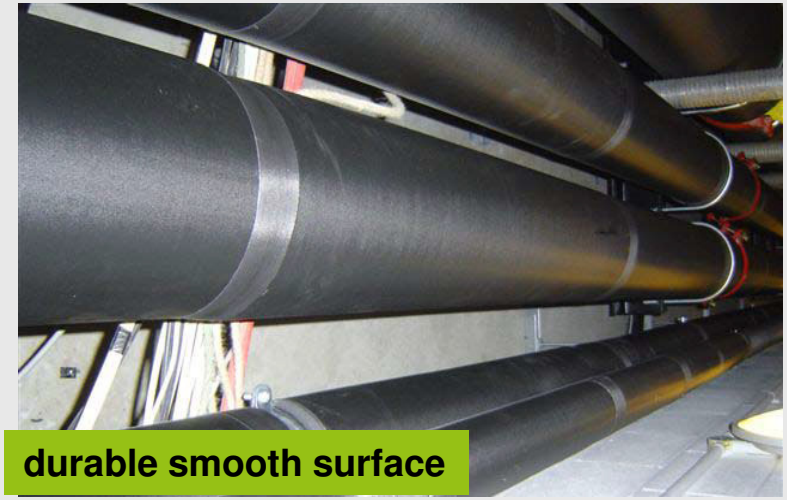
durable smooth surface



light weight

© Armacell Enterprise GmbH

Armaflex Protect

Technical parameters:

- **Flexible fire seal and insulation for non-combustible and combustible pipes through fire rersistan t walls and floors (EI30 to EI120)**

  - Application temperature -50°C up to+85 °C
  - Lambda = 0,056 W/mK at 0 °C
  - MU ≥ 5000
  - Not UV resistant
  - Reaction to Fire Class E

Penetrations Through Flexible and Rigid Walls and Rigid Floors

The first support (service support construction) for installations in flexible walls, rigid walls and rigid floors had to be at maxim **650 mm** (measure from the surface of the separating element).

The surface support construction must be fixed to the separating element or a suitable adjacent building element on both sides of the penetration seal in such a manner that in case of fire **NO ADDITIONAL LOAD** is imposed on the seal.

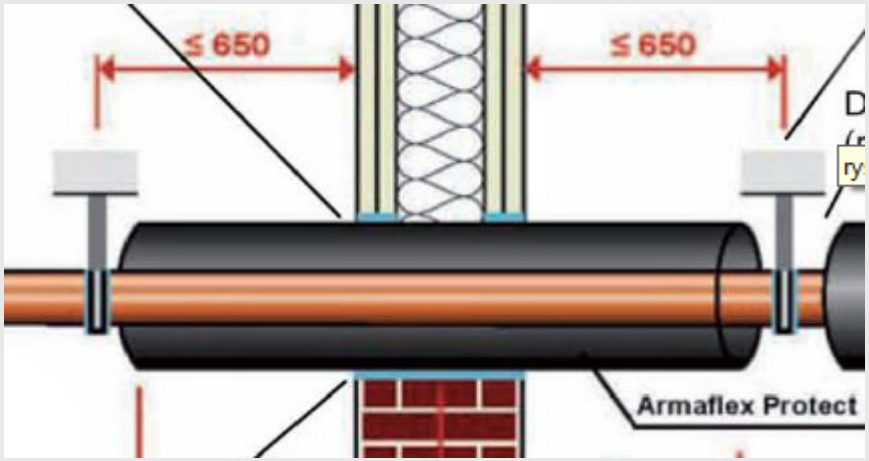

Rigid Floors(ceilings)

Armaflex Protect insulation thickness and L length – depends on penetrating pipe (metal or plastik) and pipe dimenssion
Data specified in ETA

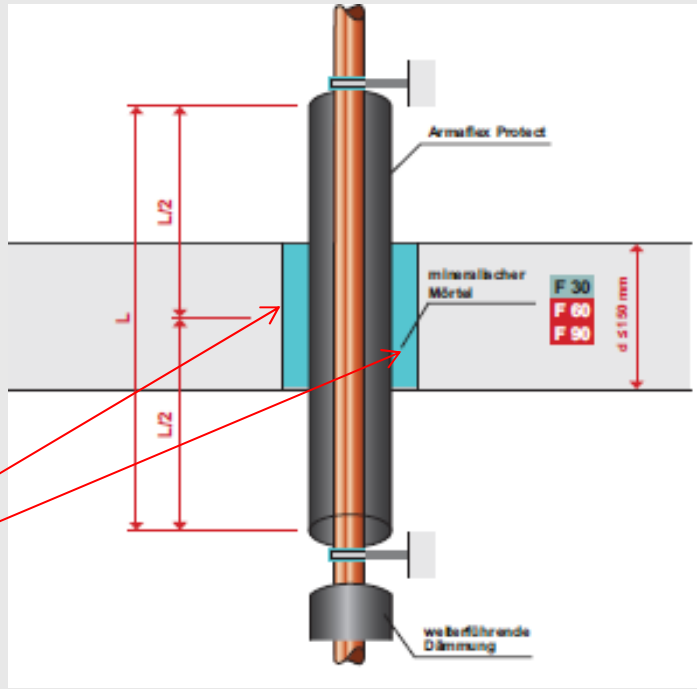

Residual gaps to be filled completely

Fire Resistance Classification According to EN 13501-2:2007: Armaflex Protect Built With Metal Pipes

Penetrating element Metal pipes (C/U); (C/C) diameter in mm	Fire resistance classifications						
≤ 8	E 15 EI 15	E 20 EI 20	E 30 EI 30	E 45 EI 45	E 60 EI 60	E 90 EI 90	E 120 EI 120
> 8 - ≤ 15	E 15 EI 15	E 20 EI 20	E 30 EI 30	E 45 EI 45	E 60 EI 60	E 90 EI 90	E 120 EI 120*
> 15 - ≤ 28	E 15 EI 15	E 20 EI 20	E 30 EI 30	E 45 EI 45	E 60 EI 60	E 90 EI 90	E 120 EI 120*
≤ 35	E 15 EI 15	E 20 EI 20	E 30 EI 30	E 45 EI 45	E 60 EI 60	E 90 EI 90	E 120 EI 120
> 35 - ≤ 42	E 15 EI 15	E 20 EI 20	E 30 EI 30	E 45 EI 45	E 60 EI 60	E 90 EI 90	E 120 EI 120
> 42 - ≤ 89	E 15 EI 15	E 20 EI 20	E 30 EI 30	E 45 EI 45	E 60 EI 60	E 90 EI 90	E 120 EI 120
> 89 - ≤ 108	E 15 EI 15	E 20 EI 20	E 30 EI 30	E 45 EI 45	E 60 EI 60	E 90 EI 90	E 120
> 108 - ≤ 168,3	E 15 EI 15	E 20 EI 20	E 30 EI 30	E 45 EI 45	E 60 EI 60*	E 90 EI 90*	E 120
> 168,3 - ≤ 326	E 15* EI 15*	E 20* EI 20*	E 30* EI 30*	E 45* EI 45*	E 60	E 90*	